APPENDIX–III (SHEET 1 OF 4)
TO TECHNICAL SPECIFICATION
FOR FIRE PROTECTION SYSTEM REV.–5

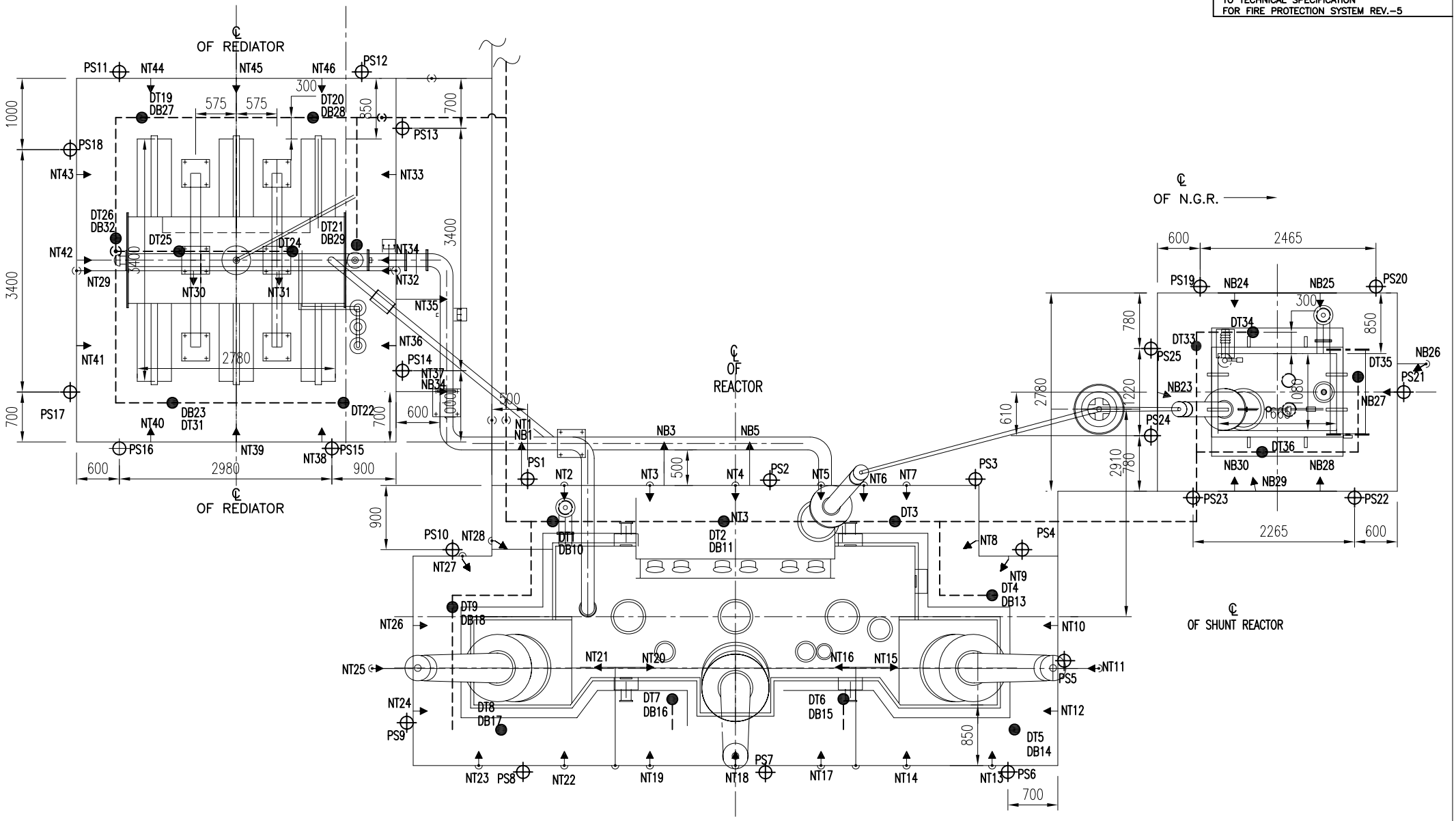

PLAN VIEW

TYPICAL SPRAY SYSTEM DRAWING FOR REACTOR

APPENDIX–III (SHEET 2 OF 4)
TO TECHNICAL SPECIFICATION
FOR FIRE PROTECTION SYSTEM REV.–5

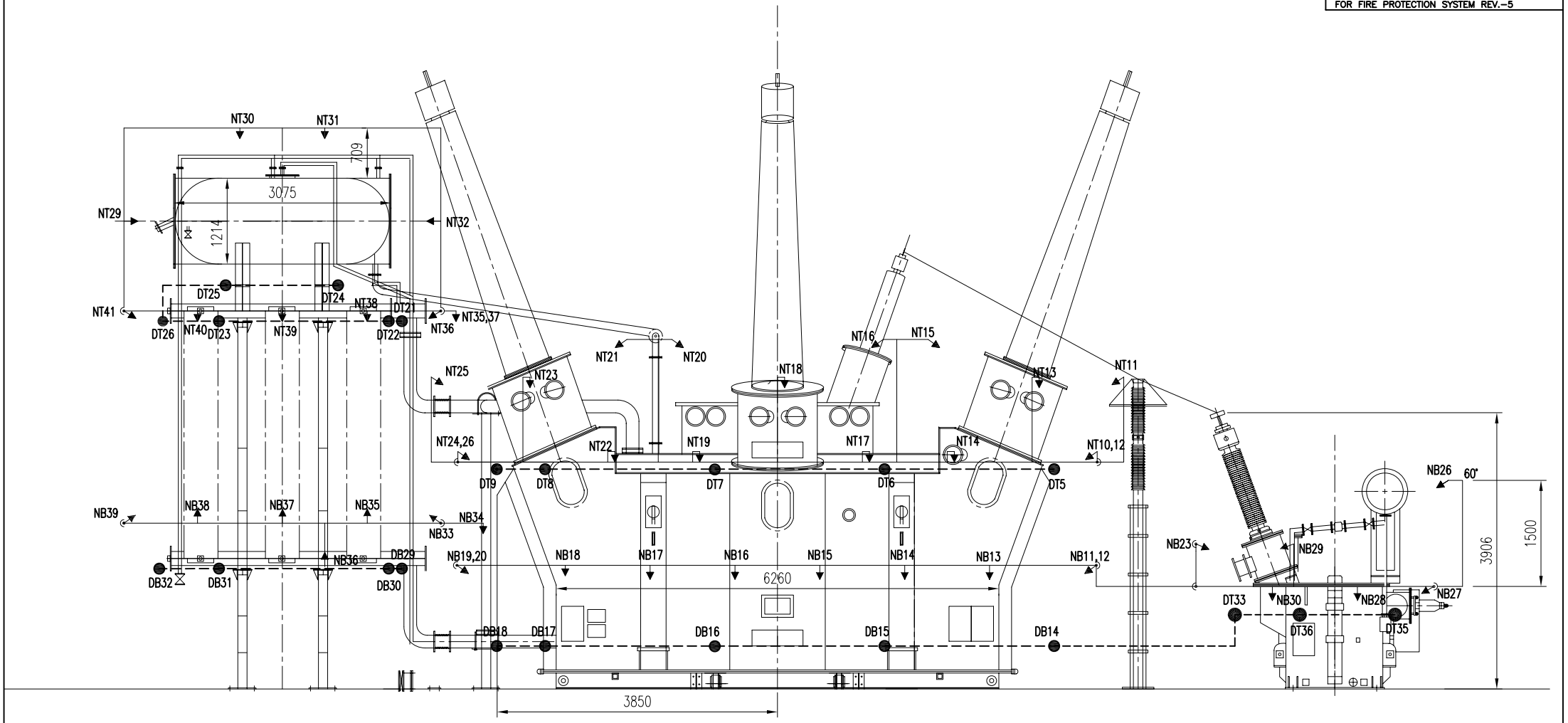

ELEVATION

TYPICAL SPRAY SYSTEM DRAWING FOR REACTOR

APPENDIX-III (SHEET 3 OF 4)
TO TECHNICAL SPECIFICATION
FOR FIRE PROTECTION SYSTEM REV.-5

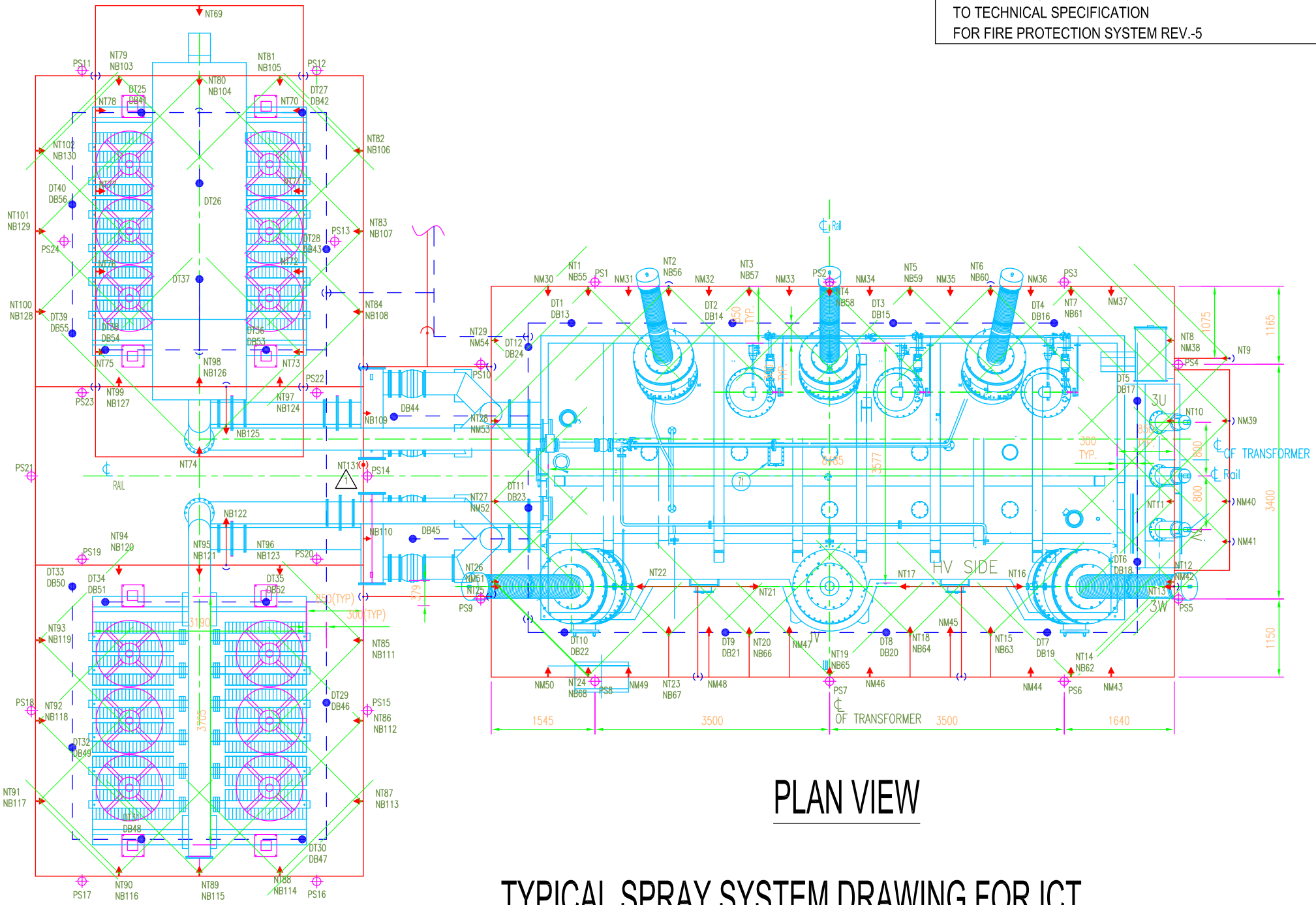

PLAN VIEW

TYPICAL SPRAY SYSTEM DRAWING FOR ICT

APPENDIX-III (SHEET 4 OF 4)
TO TECHNICAL SPECIFICATION
FOR FIRE PROTECTION SYSTEM REV.-5

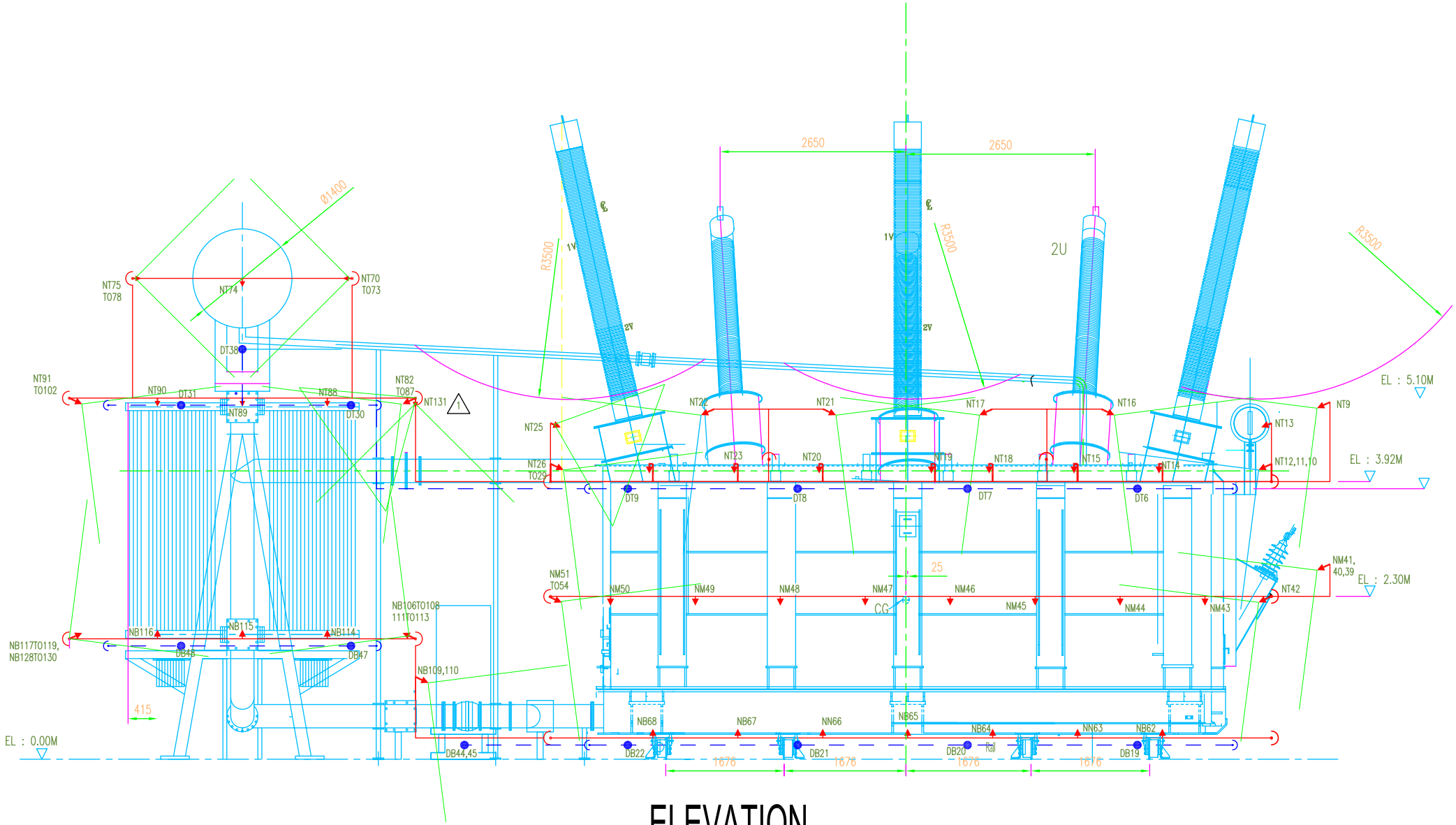

ELEVATION

TYPICAL SPRAY SYSTEM DRAWING FOR ICT

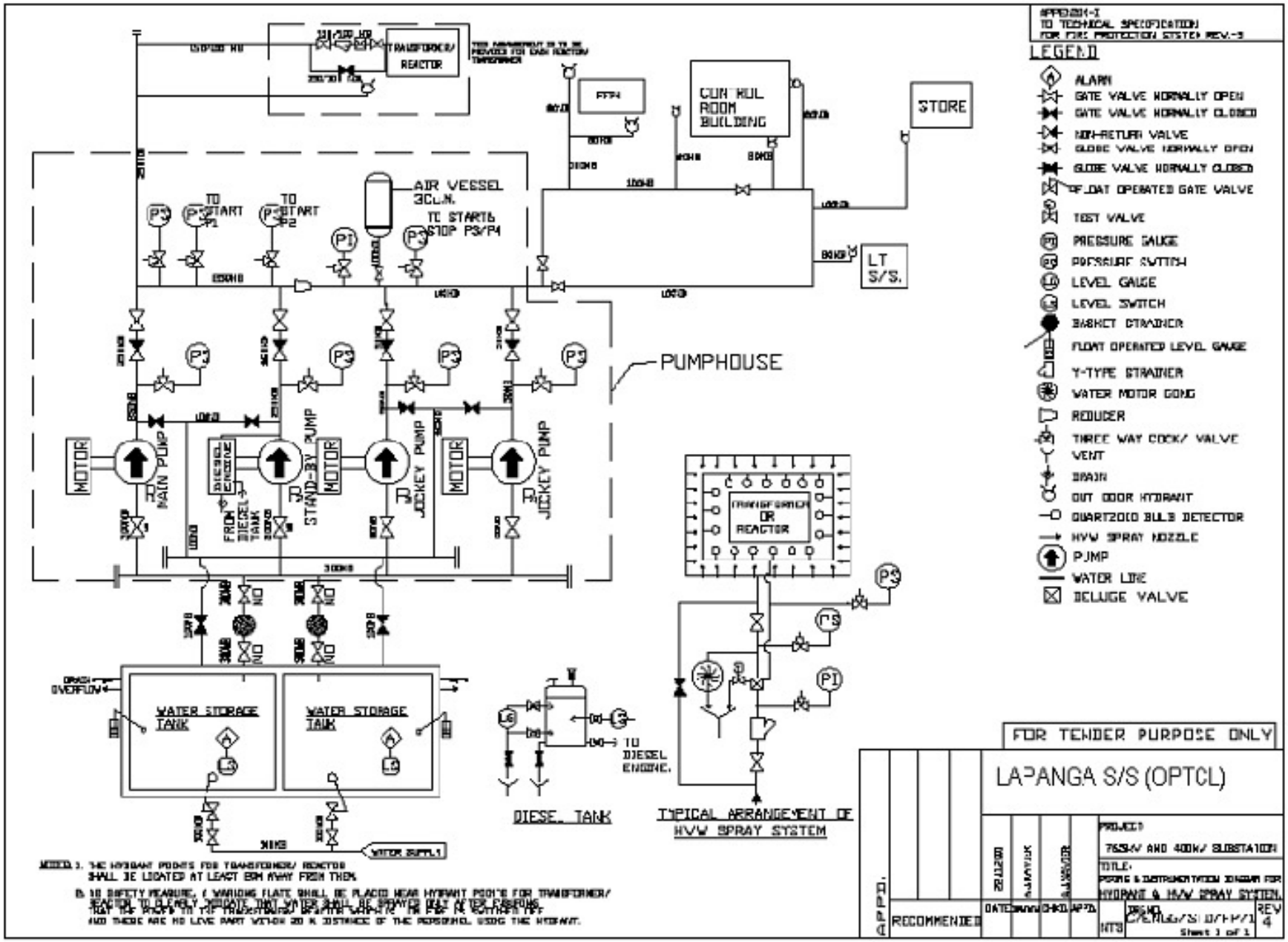
APPENDIX-I
TO TECHNICAL SPECIFICATION
FOR FIRE PROTECTION SYSTEM REV.-3
LEGEND
ALARM
GATE VALVE NORMALLY OPEN
GATE VALVE NORMALLY CLOSED
NON-RETURN VALVE
GLOBE VALVE NORMALLY OPEN
GLOBE VALVE NORMALLY CLOSED
FLOAT OPERATED GATE VALVE
TEST VALVE
PRESSURE GAUGE
PRESSURE SWITCH
LEVEL GAUGE
LEVEL SWITCH
BASKET STRAINER
FLOAT OPERATED LEVEL GAUGE
Y-TYPE STRAINER
WATER MOTOR GONG
REDUCER
THREE WAY COCK/ VALVE
VENT
DRAIN
OUT DOOR HYDRANT
QUARTZOID BULB DETECTOR
HVW SPRAY NOZZLE
PUMP
WATER LINE
DELUGE VALVE
TRANSFORMER/ REACTOR
FFPH
CONTROL ROOM BUILDING
STORE
LT S/S.
AIR VESSEL 3CU.M.
TO START P1
TO START P2
TO START & STOP P3/P4
PUMPHOUSE
MOTOR
MAIN PUMP
DIESEL ENGINE
STAND-BY PUMP
JOCKEY PUMP
FROM DIESEL TANK
WATER STORAGE TANK
DRAIN OVERFLOW
WATER SUPPLY
TO DIESEL ENGINE.
DIESEL TANK
TRANSFORMER OR REACTOR
TYPICAL ARRANGEMENT OF HVW SPRAY SYSTEM
FOR TENDER PURPOSE ONLY
LAPANGA S/S (OPTCL)
PROJECT:
765kV AND 400kV SUBSTATION
TITLE:
PIPING & INSTRUMENTATION DIAGRAM FOR HYDRANT & HVW SPRAY SYSTEM.
RECOMMENDED
DATE
CHKD.
APPD.
NTS
REV 4
Sheet 1 of 1

APPENDIX-II
TO TECHNICAL SPECIFICATION
FOR FIRE PROTECTION SYSTEM REV.-5

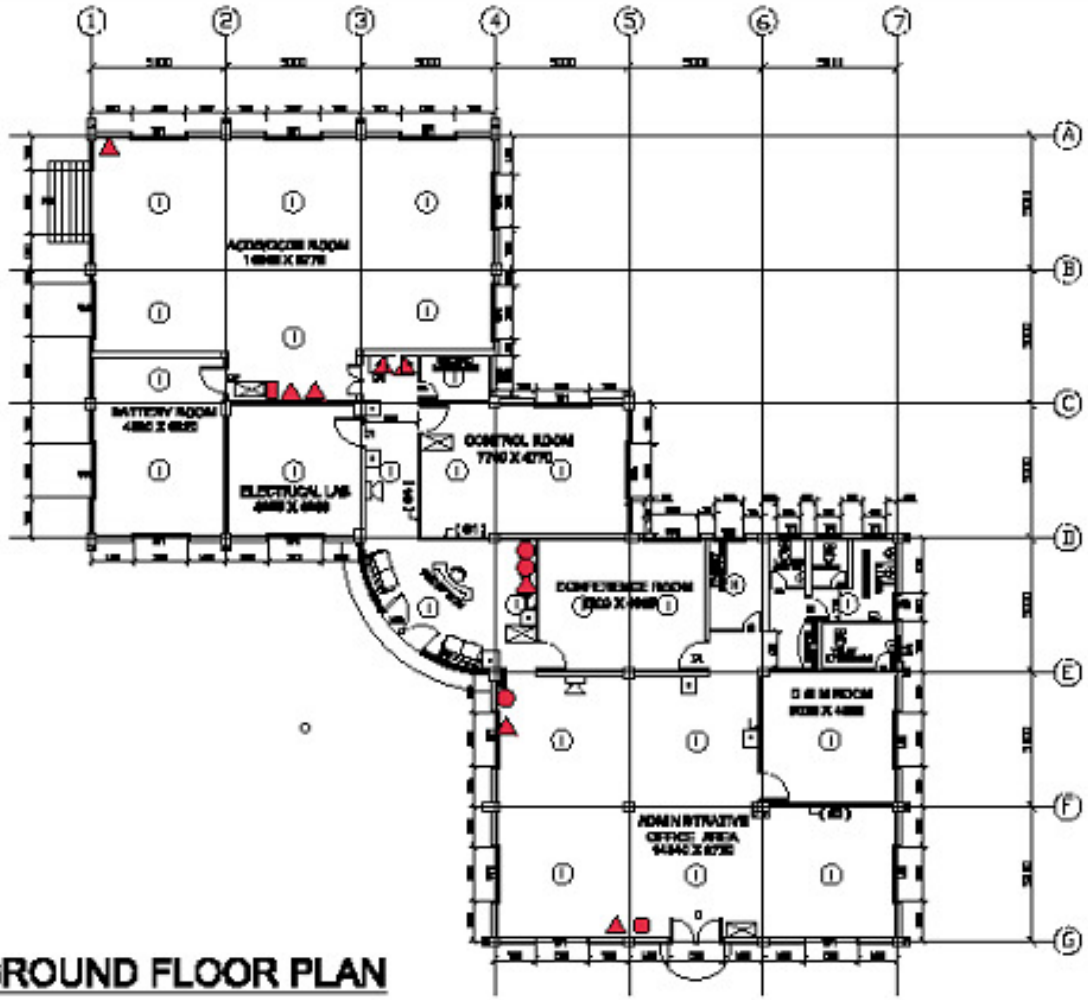

BILL OF QUANTITY FOR FIRE EXTINGUISHERS		
SYMBOL	TYPE	QUANTITY
▲	4.5 kg CO2	[illegible]
■	9 LITRE WATER	[illegible]
▮	9 kg DCP	[illegible]

* FOR FIRE WATER PUMP HOUSE SEE DWG. [illegible]

BILL OF QUANTITY FOR FIRE DETECTORS		
SYMBOL	ITEM	QUANTITY
(I)	HANDHELD DETECTORS	[illegible]
(H)	HEAT DETECTOR	[illegible]
[illegible]	[illegible]	[illegible]
[illegible]	MANUAL CALL POINT	[illegible]
[illegible]	[illegible]	[illegible]

@ For Fire water Pump House.

NOTES :-
ALL DIMENSIONS ARE IN MM. UNLESS OTHERWISE SPECIFIED.

GROUND FLOOR PLAN

LAPANGA S/S (OPTCL)

[illegible]

STANDARD CONTROL ROOM LAYOUT
LOCATION OF DETECTORS AND PENDANTS
[illegible]

[illegible]

REV.	DESCRIPTION	DRN.	DSN.	DSN.	PROD.	CHK.	APPD.	APPD.	DATE

1400 | 0

APPENDIX–III (SHEET 1 OF 4)
TO TECHNICAL SPECIFICATION
FOR FIRE PROTECTION SYSTEM REV.–5

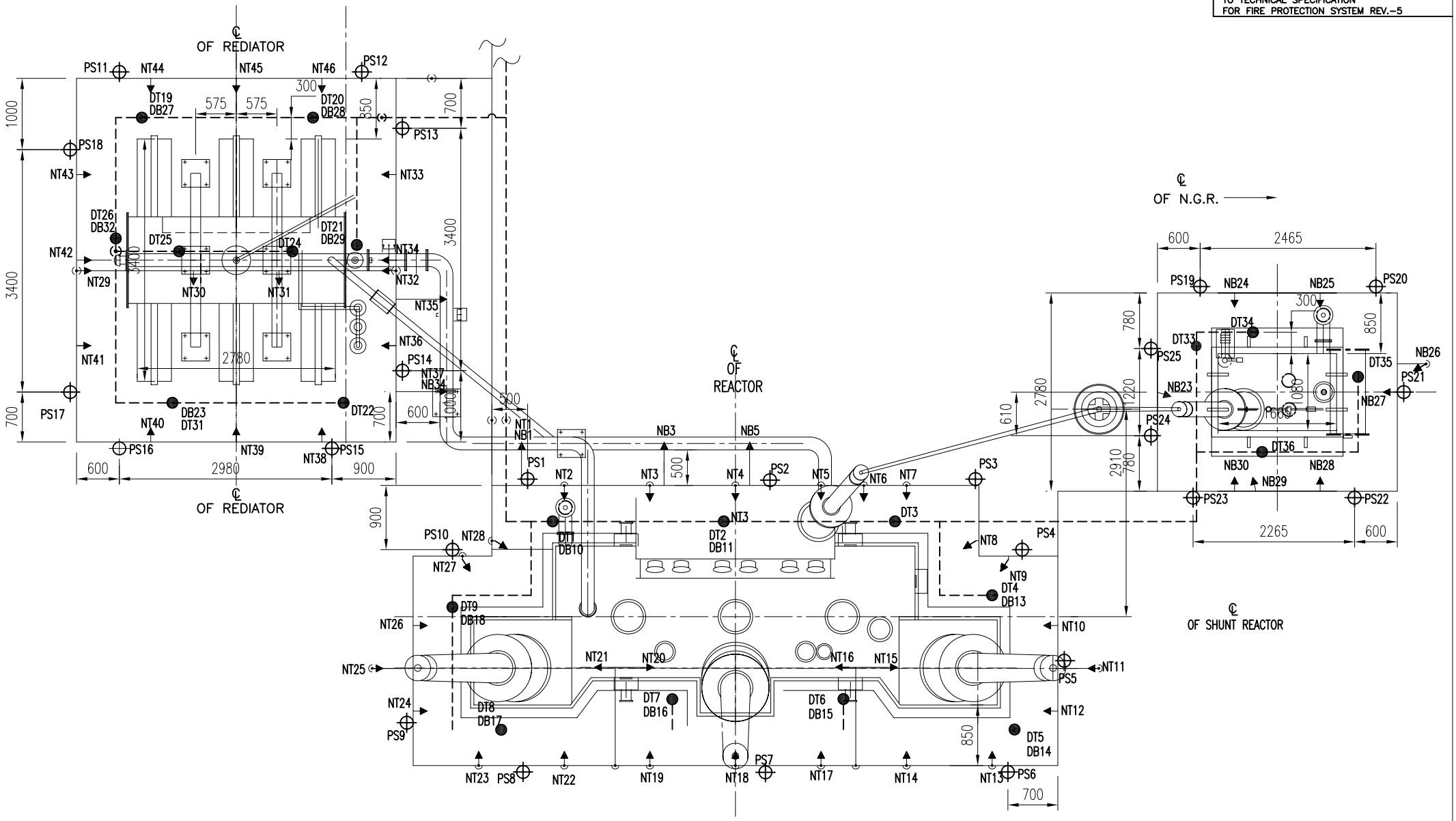

PLAN VIEW

TYPICAL SPRAY SYSTEM DRAWING FOR REACTOR

APPENDIX–III (SHEET 2 OF 4)
TO TECHNICAL SPECIFICATION
FOR FIRE PROTECTION SYSTEM REV.–5

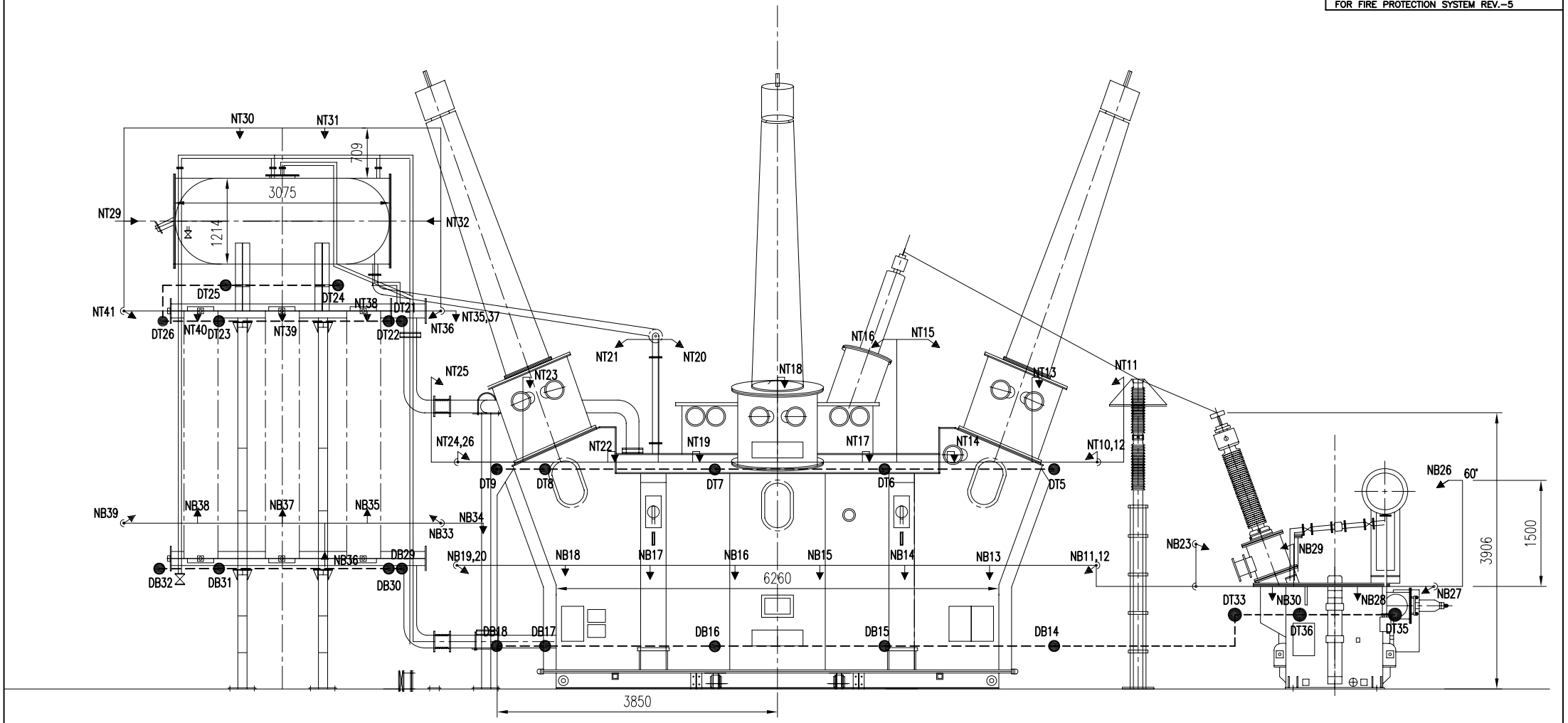

ELEVATION

TYPICAL SPRAY SYSTEM DRAWING FOR REACTOR

APPENDIX-III (SHEET 3 OF 4)
TO TECHNICAL SPECIFICATION
FOR FIRE PROTECTION SYSTEM REV.-5

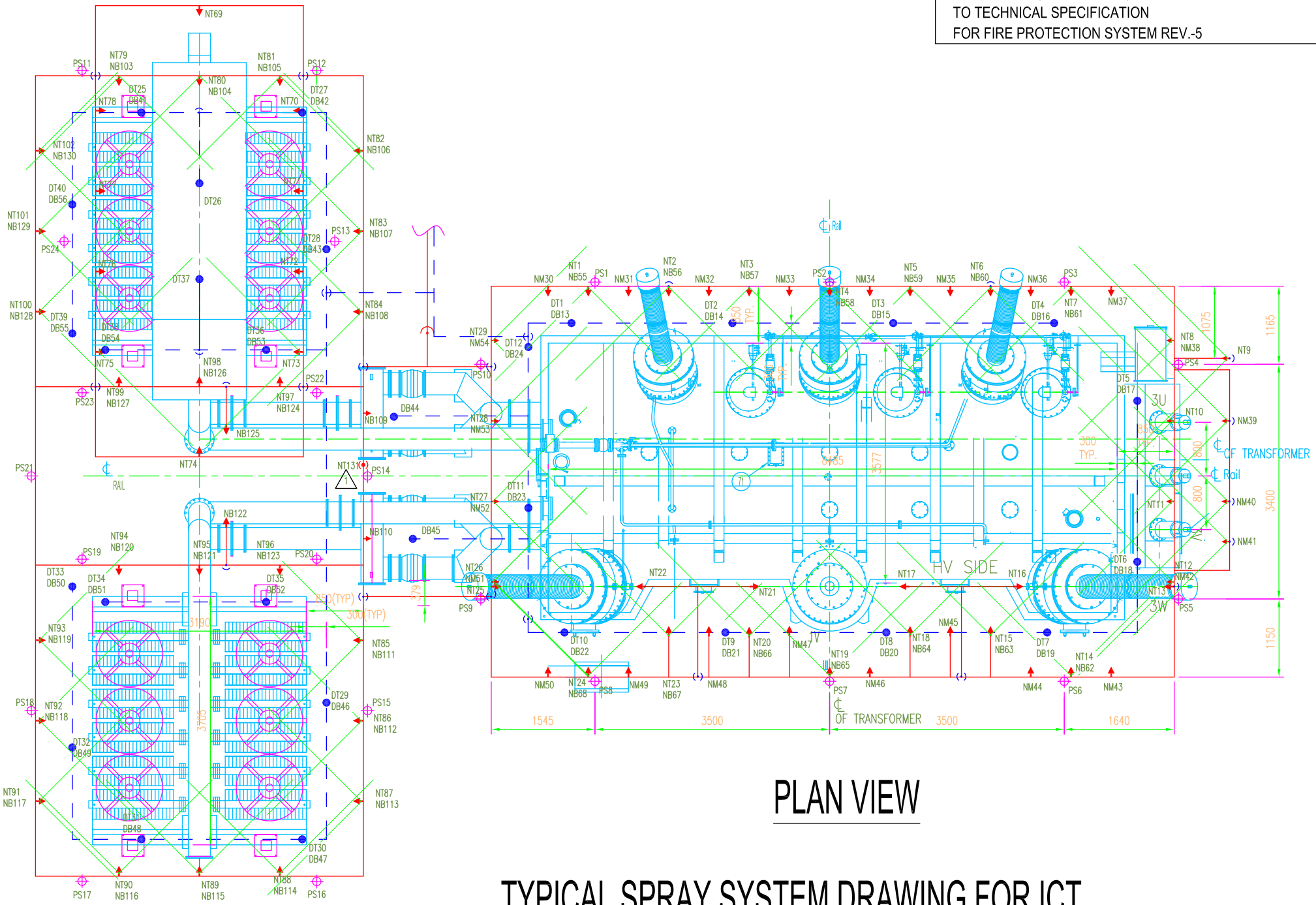

PLAN VIEW

TYPICAL SPRAY SYSTEM DRAWING FOR ICT

APPENDIX-III (SHEET 4 OF 4)
TO TECHNICAL SPECIFICATION
FOR FIRE PROTECTION SYSTEM REV.-5

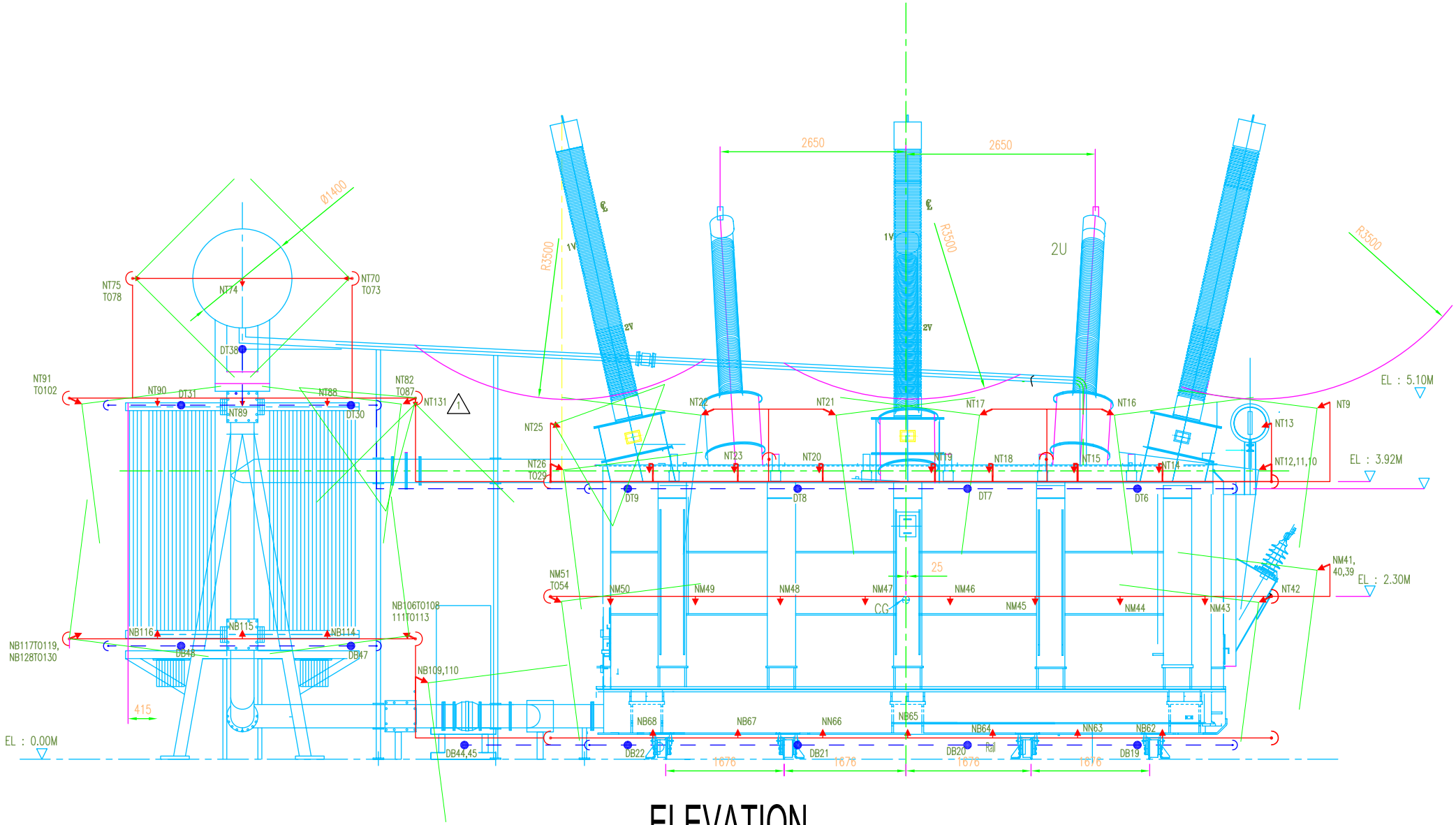

ELEVATION

TYPICAL SPRAY SYSTEM DRAWING FOR ICT

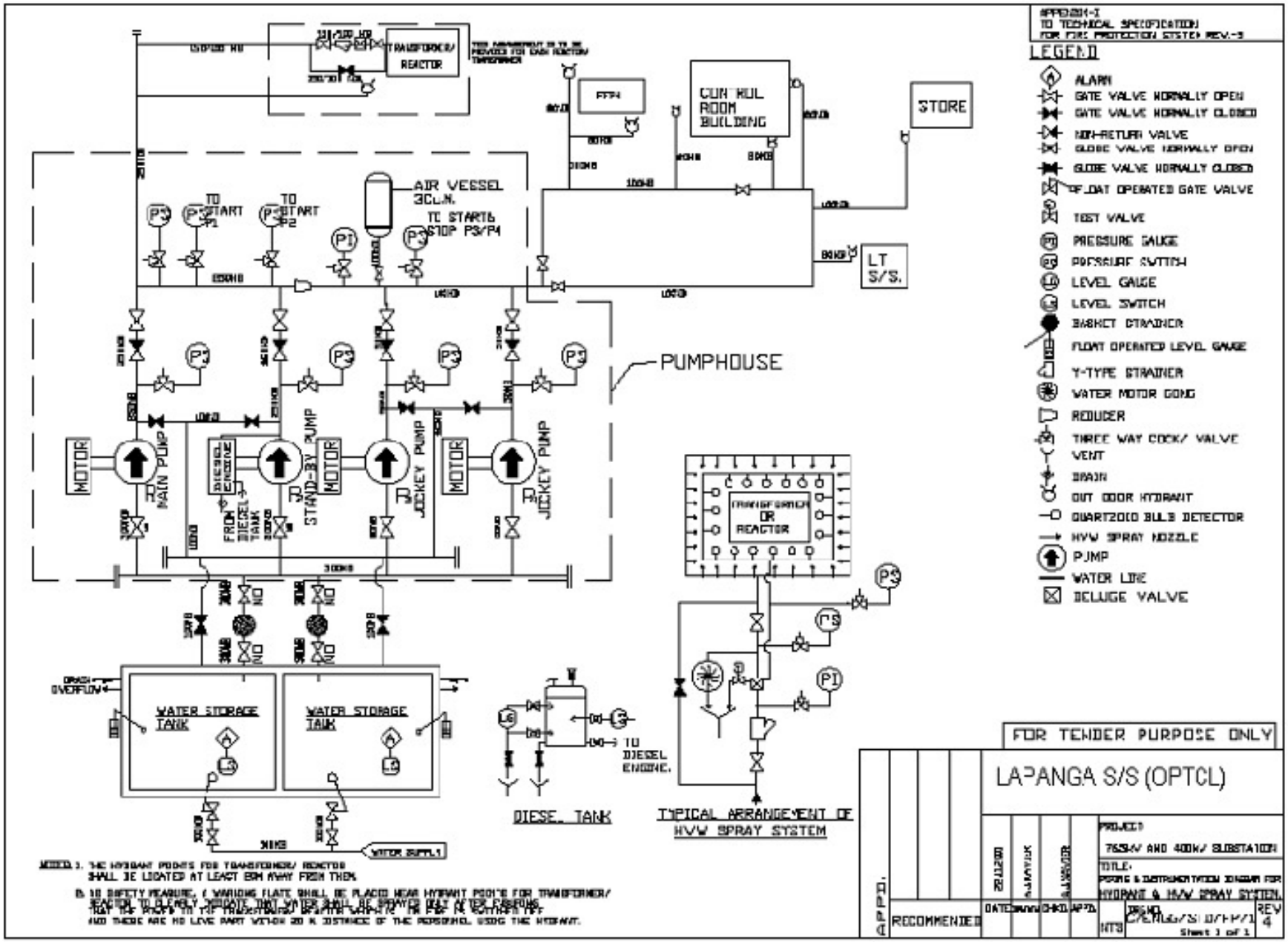
APPENDIX-I
TO TECHNICAL SPECIFICATION
FOR FIRE PROTECTION SYSTEM REV.-3
LEGEND
ALARM
GATE VALVE NORMALLY OPEN
GATE VALVE NORMALLY CLOSED
NON-RETURN VALVE
GLOBE VALVE NORMALLY OPEN
GLOBE VALVE NORMALLY CLOSED
FLOAT OPERATED GATE VALVE
TEST VALVE
PRESSURE GAUGE
PRESSURE SWITCH
LEVEL GAUGE
LEVEL SWITCH
BASKET STRAINER
FLOAT OPERATED LEVEL GAUGE
Y-TYPE STRAINER
WATER MOTOR GONG
REDUCER
THREE WAY COCK/ VALVE
VENT
DRAIN
OUT DOOR HYDRANT
QUARTZOID BULB DETECTOR
HVW SPRAY NOZZLE
PUMP
WATER LINE
DELUGE VALVE
TRANSFORMER/ REACTOR
FFPH
CONTROL ROOM BUILDING
STORE
LT S/S.
AIR VESSEL 3CU.M.
TO START P1
TO START P2
TO START & STOP P3/P4
PUMPHOUSE
MOTOR
MAIN PUMP
DIESEL ENGINE
STAND-BY PUMP
JOCKEY PUMP
FROM DIESEL TANK
WATER STORAGE TANK
DRAIN OVERFLOW
WATER SUPPLY
TO DIESEL ENGINE.
DIESEL TANK
TRANSFORMER OR REACTOR
TYPICAL ARRANGEMENT OF HVW SPRAY SYSTEM
FOR TENDER PURPOSE ONLY
LAPANGA S/S (OPTCL)
PROJECT:
765kV AND 400kV SUBSTATION
TITLE:
PIPING & INSTRUMENTATION DIAGRAM FOR HYDRANT & HVW SPRAY SYSTEM.
RECOMMENDED
DATE
CHKD.
APPD.
NTS
REV 4
Sheet 1 of 1

APPENDIX-II
TO TECHNICAL SPECIFICATION
FOR FIRE PROTECTION SYSTEM REV.-5

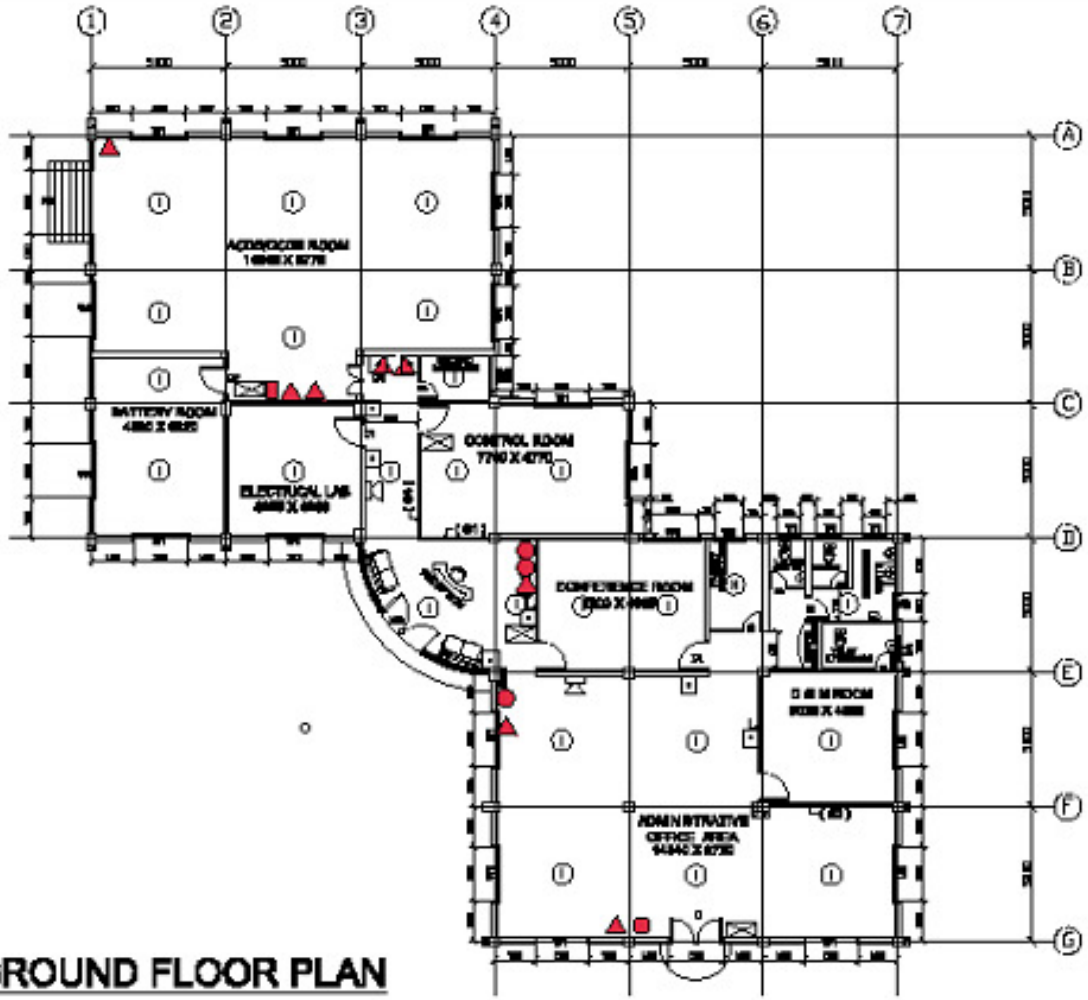

BILL OF QUANTITY FOR FIRE EXTINGUISHERS		
SYMBOL	TYPE	QUANTITY
▲	4.5 kg CO2	[illegible]
■	9 LITRE WATER	[illegible]
▮	9 kg DCP	[illegible]

* FOR FIRE WATER PUMP HOUSE SEE DWG. [illegible]

BILL OF QUANTITY FOR FIRE DETECTORS		
SYMBOL	ITEM	QUANTITY
(I)	HANDHELD DETECTORS	[illegible]
(H)	HEAT DETECTOR	[illegible]
[illegible]	[illegible]	[illegible]
[illegible]	MANUAL CALL POINT	[illegible]
[illegible]	[illegible]	[illegible]

@ For Fire water Pump House.

NOTES :-
ALL DIMENSIONS ARE IN MM. UNLESS OTHERWISE SPECIFIED.

GROUND FLOOR PLAN

LAPANGA S/S (OPTCL)

[illegible]

STANDARD CONTROL ROOM LAYOUT
LOCATION OF DETECTORS AND PENDANTS
[illegible]

[illegible]

REV.	DESCRIPTION	DRN.	DSN.	DSN.	PROD.	CHK.	APPD.	APPD.	DATE

1400 | 0